BOSCA®

150MM FREE STANDING WOOD FIRE FLUE KIT INSTALLATION INSTRUCTIONS

WARNING: THIS FLUE KIT HAS BEEN MANUFACTURED IN ACCORDANCE WITH AS/NZS 2918:2001 AND TESTED TO APPENDIX F. TO ENSURE SAFETY THIS FLUE KIT MUST BE INSTALLED AS OUTLINED IN THESE INSTRUCTIONS AND THE APPROPRIATE REQUIREMENTS OF THE RELEVANT BUILDING CODE OR CODES. WOOD FIRE AND FLUE CLEARANCES FROM THE COMBUSTIBLE WALLS MUST BE IN ACCORDANCE WITH WOOD FIRE MANUFACTURER'S SPECIFICATIONS AND AS/NZS 2918:2001. THESE INSTALLATION INSTRUCTIONS ARE FOR TESTED APPLIANCES ONLY.

CAUTION: MIXING FLUE SYSTEM COMPONENTS FROM DIFFERENT SOURCES OR MODIFYING THE DIMENSIONAL SPECIFICATION OF COMPONENTS MAY RESULT IN HAZARDOUS CONDITIONS. WHERE SUCH ACTION IS CONSIDERED, THE MANUFACTURER SHOULD BE CONSULTED IN THE FIRST INSTANCE.

CAUTION: IT IS THE RESPONSIBILITY OF THE INSTALLER TO ENSURE THAT THE INSTALLATION OF THIS FLUE KIT COMPLIES WITH AS/NZS 2918:2001, THE APPLIANCE MANUFACTURERS SPECIFICATIONS FOR FLUE PIPE SHIELD AND CEILING PLATE AND THAT THE RELEVANT BUILDING CODES ARE ADHERED TO.
BENDS AND EXTENSIONS TO THE LENGTH OF A FLUE SYSTEM ARE PERMITTED (AS/NZS 2918:2001 4.1).

FLAT CEILING INSTALLATION

1) Locate the wood fire in its proposed position and mark a point on the ceiling that is directly above the centre of the flue spigot. Check that the location of the wood fire allows the OUTER GALV LINER to clear all structural roof timbers.

2) Cut a 250mm square hole in the ceiling. Directly above cut a hole in roof to accommodate OUTER GALV LINER.

3) Fit a timber frame around the ceiling. i.e. frames form a 250mm square aperture that allows air to circulate freely over the OUTER GALV LINER surface.

4) Position the OUTER GALV LINER so that it is flush with the underneath of the ceiling and protrudes through the roof at the required height. Note that AS/NZS 2918:2001 4.9 1(a) states," the FLUE PIPE shall extend no less than 4.6m above the top of the floor protector". **Refer to diagram A.**

a) If the FLUE PIPE is within 3 metres of the ridge, the FLUE PIPE must protrude at least 600mm above the ridge of the roof.

b) If the distance from the ridge is more than 3 metres, the FLUE PIPE must protrude at least 1000mm above roof penetration.

c) The FLUE PIPE must be more than 3 metres from any nearby structure. **Refer to diagram D**.

Additional FLUE PIPE, OUTER GALV LINER and/or INNER GALV LINER may have to be added to ensure the following:

i) The correct minimum roof penetration height.
ii) Sufficient overall height to encase the FLUE PIPE which must extend a minimum of 4.6m from the floor protector. **Refer diagram A**.

Note that the INNER GALV LINER should extend 200mm above roof penetration.

NB: Do not secure the OUTER GALV LINER SLIP EXTENSION onto the OUTER GALV LINER, as final adjustment will be required when fitting COWL assembly. (See 11).

5) Fix an appropriate flashing around the OUTER GALV LINER to seal onto the roofing material. Refer to the manufacturer's recommendations for the correct fitting.

NB: On iron roofs, fixings such as metal angle brackets (40mm x 40mm) can be fitted under the flashing to securely fix the roof to OUTER GALV LINER (supplied).

6) Place CEILING PLATE over wood fire's flue spigot, ensuring the folded edges are facing the ceiling.

7) Position bottom length of FLUE PIPE (crimped end downwards) into wood fire flue spigot.

Refer to the supplier of the wood fire and use flue pipe sealant if recommended.

8) Assemble FLUE PIPES together ensuring seams are straight; offsetting the seams will ensure a neat fit. FLUE PIPES must be assembled with crimped ends down (towards wood fire). Secure each joint with a minimum of three Monel Steel rivets equally spaced around the joint. The protective wrapping should be left on the FLUE PIPE during installation.

9) From the roof lower FLUE PIPE through OUTER GALV LINER into the bottom FLUE PIPE securing with three Monel rivets.

10) Check the FLUE PIPE SPACING BRACKETS inside the INNER GALV LINER are correctly positioned and then from the roof slide the INNER GALV LINER into the OUTER GALV LINER until the brackets rest on to the internal swage ring of the OUTER GALV LINER, this will ensure the INNER GALV LINER is the correct 12mm above ceiling level. Check the INNER GALV LINER when correctly positioned extends a minimum of 200mm above the roof penetration.

11) Before securing the OUTER GALV LINER SLIP EXTENSION to the OUTER GALV LINER with 3 rivets, ensure the FLUE PIPE extends above the top of the OUTER GALV LINER SLIP EXTENSION 145mm. Adjust SLIP EXTENSION to obtain the measurement.

12) Fit TOP SPACER BRACKET to the FLUE PIPE making sure the lugs fit snugly inside OUTER GALV LINER SLIP EXTENSION. Make sure TOP SPACER BRACKET fits hard down onto OUTER GALV LINER SLIP EXTENSION.

13) Fit GALV LINER COVER over the FLUE PIPE and push down firmly onto TOP SPACER BRACKET.

14) Fit COWL but do not secure, as removal for the flue cleaning will be necessary. Deform the stub of the COWL to ensure it is a tight friction fit.

15) Fasten CEILING PLATE to ceiling using screws provided. Do not over-tighten, as a 12mm air gap must be maintained via the 4 external slots). Ensure an even air gap around FLUE PIPE when fixing. Remove protective plastic from CEILING PLATE.

16) Leave all installation and operating instructions with the owner.

The Satin Black painted flue pipe can be touched up using only STOVE BRIGHT aerosol paint.

The stainless steel pipe used in the Bosca Flue Kit is warranted for five years from date of purchase to the initial purchaser, provided these installation instructions and the manufacturer's instructions on how to operate the appliance are met.

BOSCA®

SLOPING CEILING INSTALLATION

The instructions for a sloping ceiling and a flat ceiling are the same except for the following:

A) The 200mm Inner Liner, and the 250mm Outer Liner will need to be trimmed to the angle required to suit the ceiling (between 15-45 degrees).

B) Fitted to the non swaged end of the 200mm Inner Liner are 3 x locating brackets. These will need to be removed and not used.

C) A 150mm-200mm, and a 200mm-250mm spider bracket will be needed at the ceiling end of the liners.

D) Point 10) will differ from the flat ceiling installation, in that the 200mm Inner Liner will need to be 6mm lower than the 250mm Outer Liner as shown in Diagram C.

E) Ensure the 150mm-200 spider is secured to the flue pipe, and is free floating inside the 200mm Inner Liner.

F) The 200mm-250mm spider must be secured to both the 200mm Inner and 250mm Outer Liners once they have been aligned and the 6mm height difference has been achieved.

G) Point 15) will also differ from the flat ceiling installation as the sloping ceiling plate will use ceramic spacers between the ceiling plate and ceiling. Please do not over tighten the screws.

BOSCA

DIAGRAM A

150mm Free Standing Flue Kit Satin Black, 4.2 Metres

Manufactured by Retail Links Limited.

This flue kit must be installed by a suitably qualified tradesperson or solid fuel heater installer and complies with AS/NZS 2918:2001. This kit may require additional components to complete the installation

ROOF AND CEILING INSTALLATION

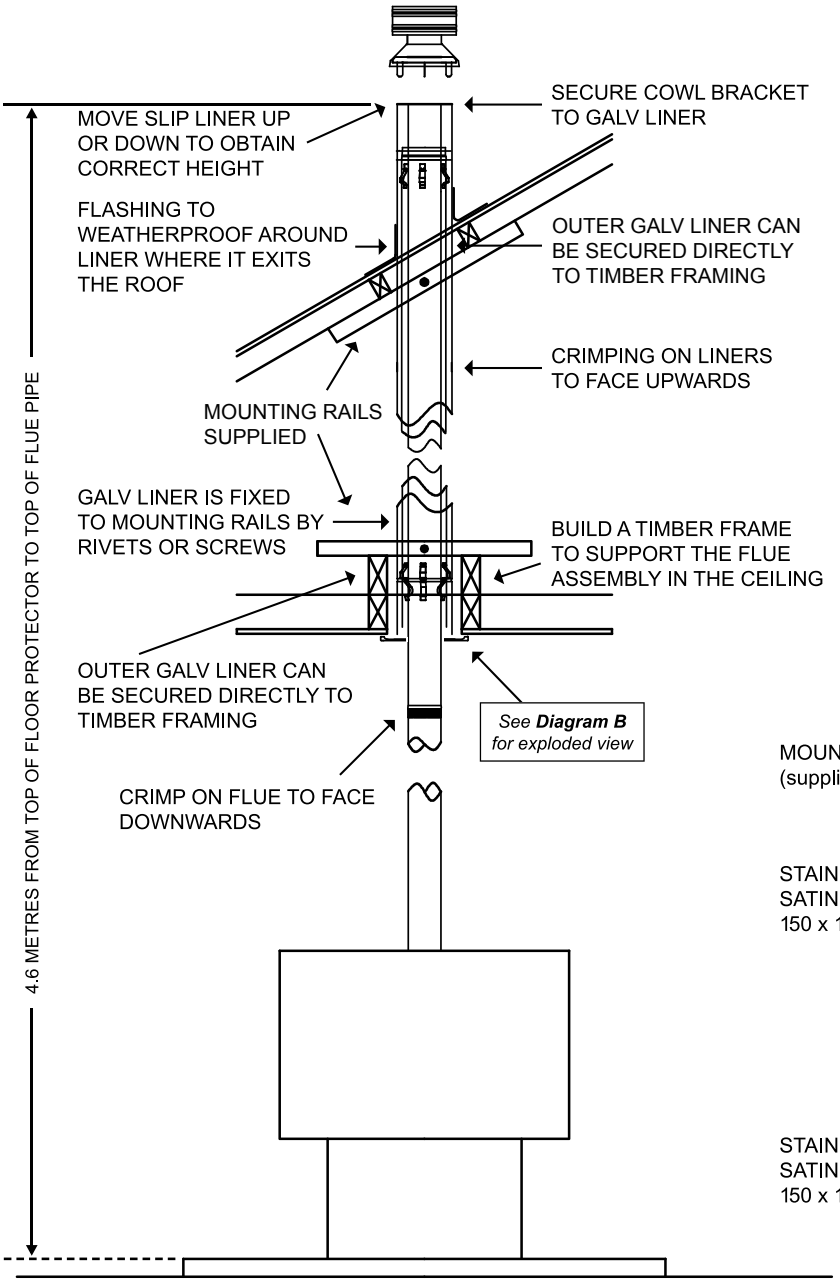

ASSEMBLY LIST

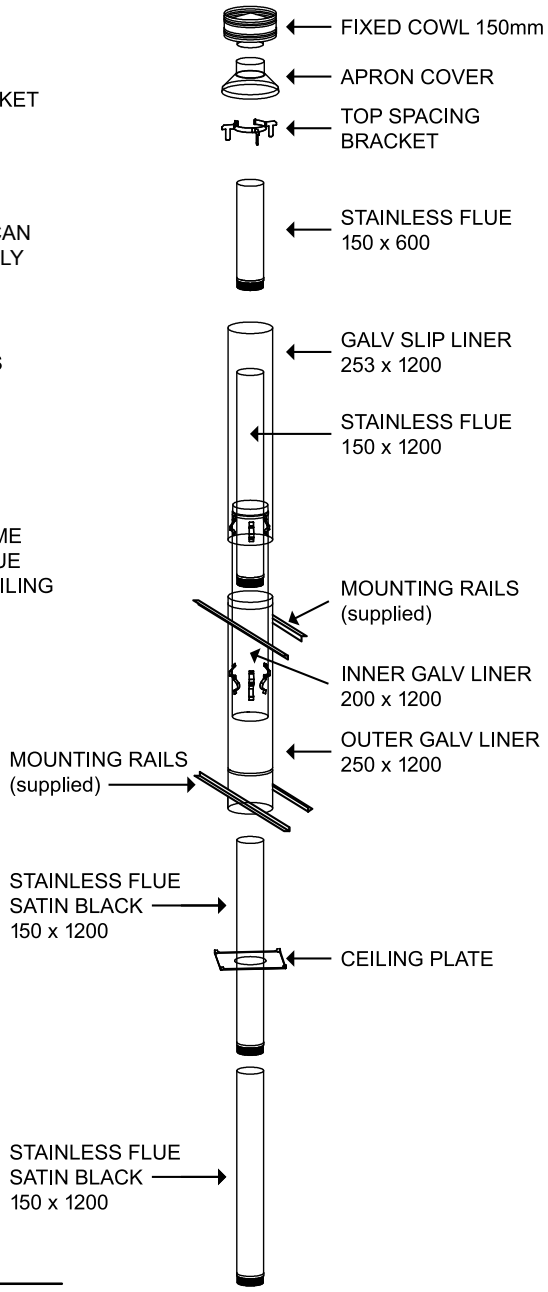

BOSCA

DIAGRAM B

POSITIONING LINERS AND CEILING PLATE

THIS DIAGRAM IS SUITABLE FOR FLAT CEILINGS ONLY

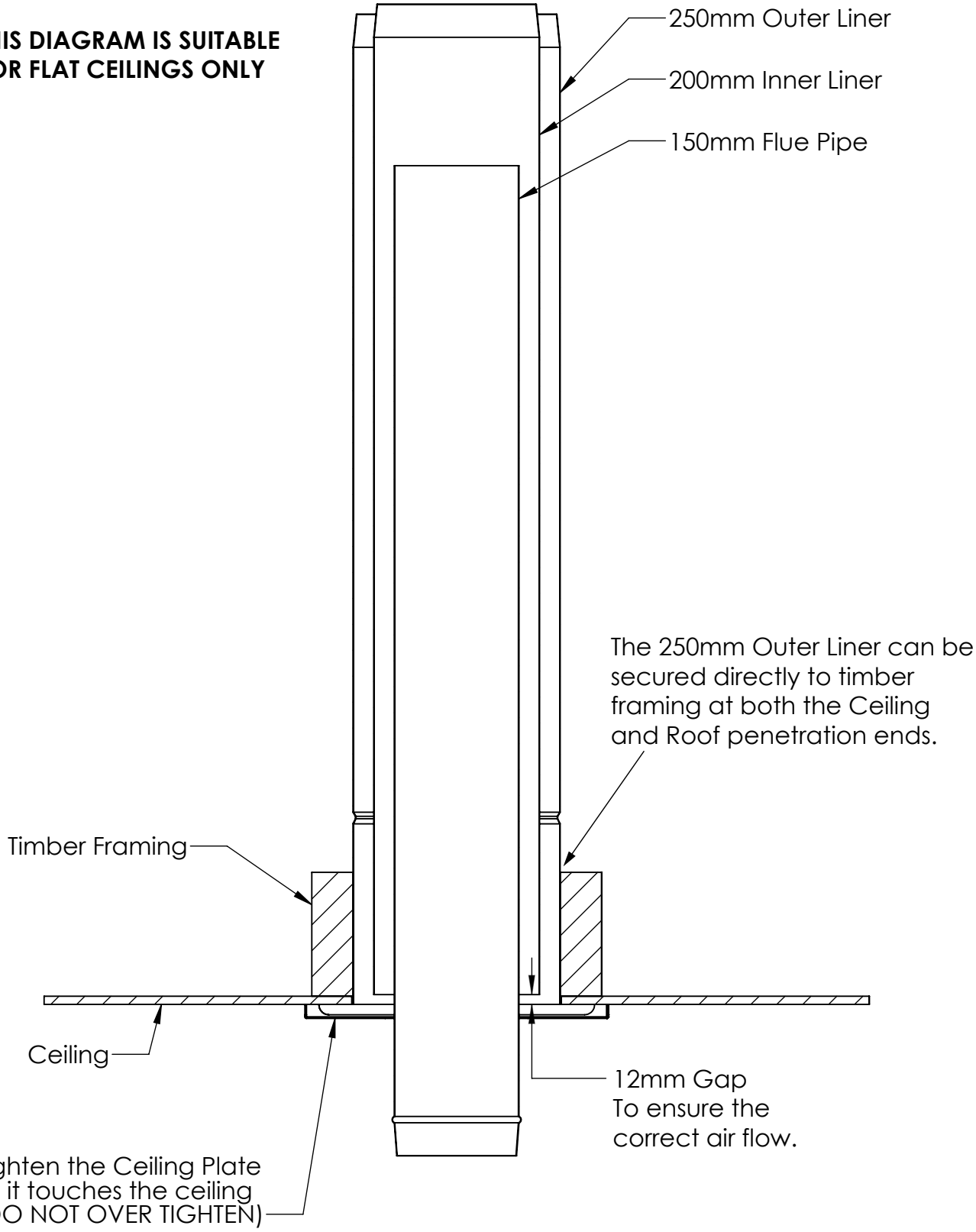

BOSCA

DIAGRAM C

POSITIONING LINERS AND CEILING PLATE

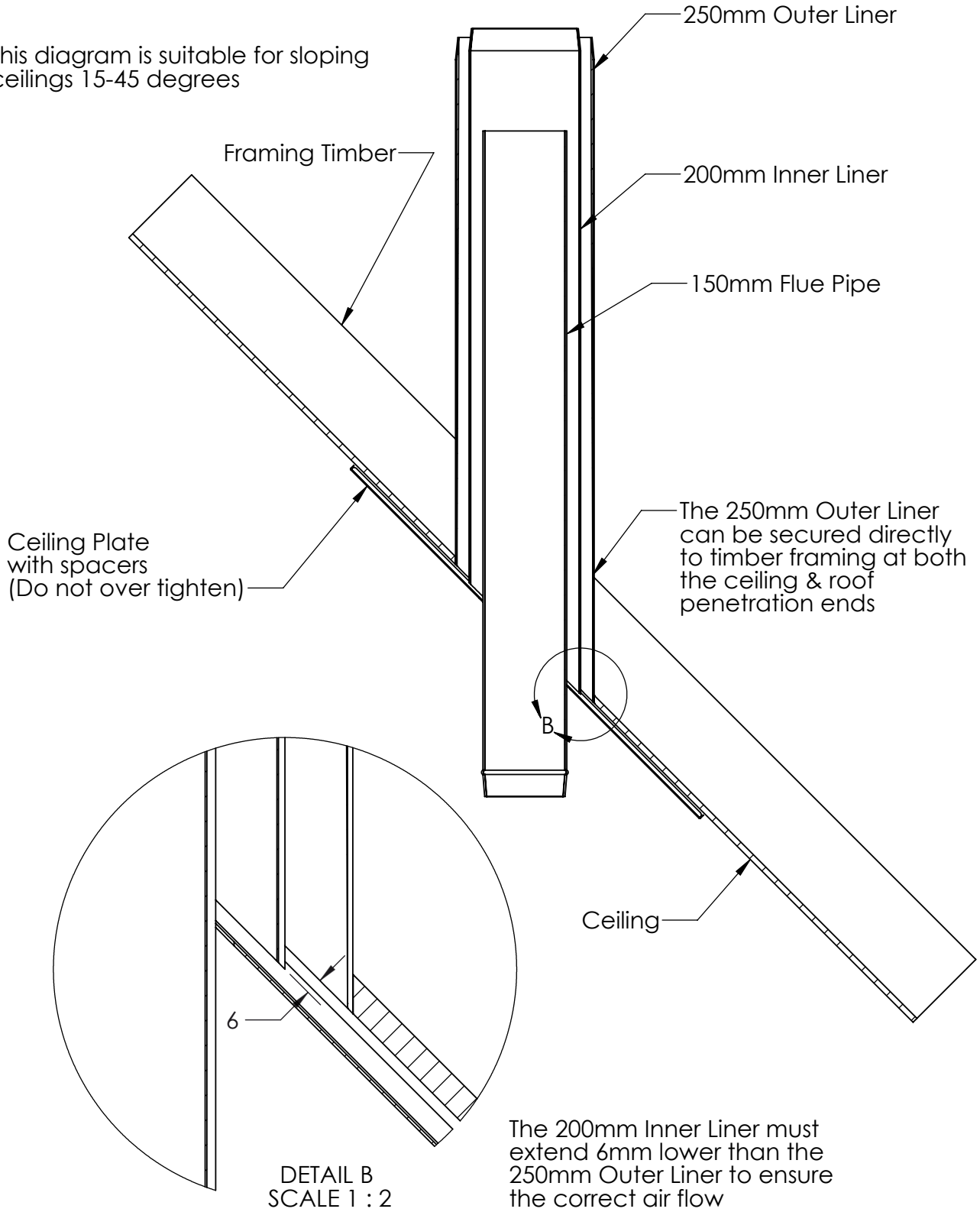

BOSCA

DIAGRAM D – AS/NZS 2918:2001

MINIMUM HEIGHTS FOR FLUE SYSTEM

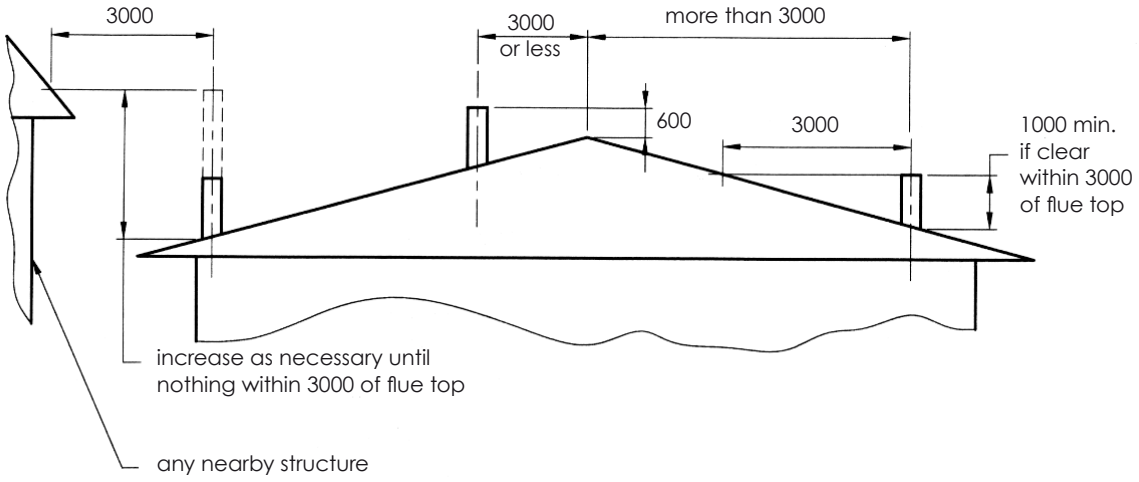

DIAGRAM 4

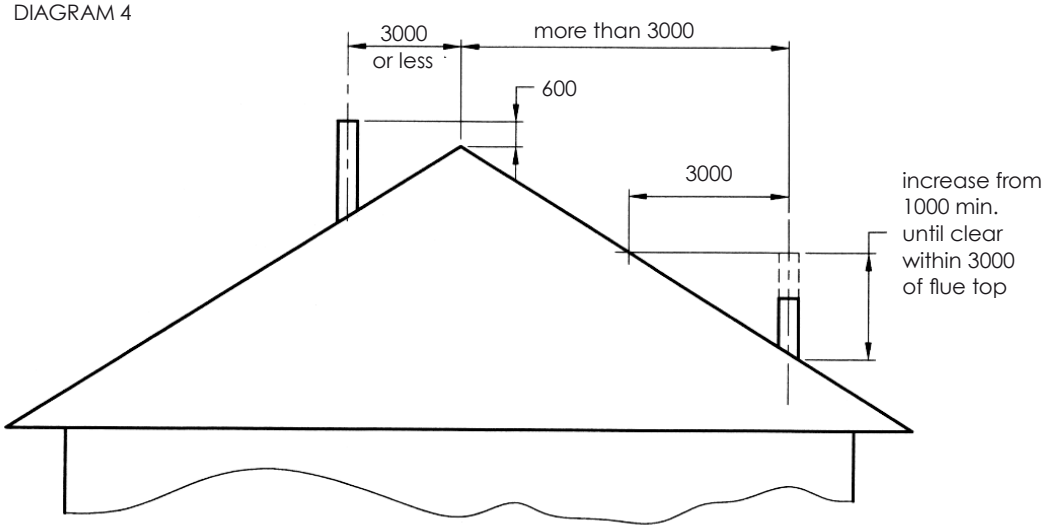

Notes:

Depending on local circumstances, taller chimneys may be required for satisfactory performance, check with your local retailer or installation technician.

BOSCA REAR HEAT SHIELD

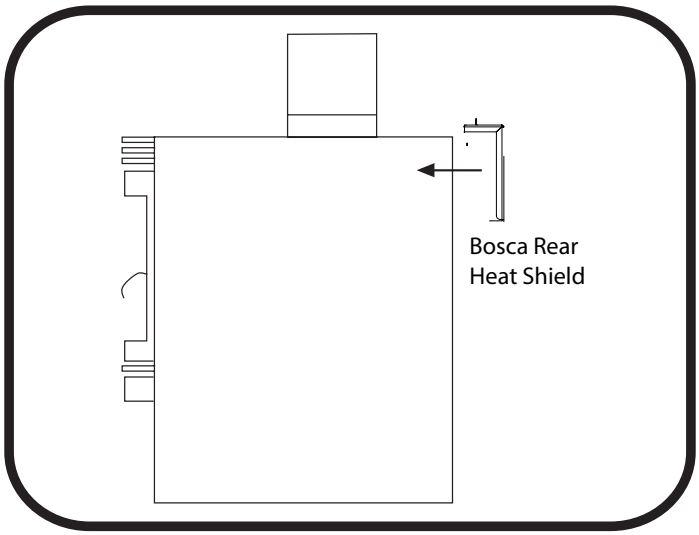

A Bosca Rear Heat Shield (shown above) is supplied in all Bosca Flue Shield Kits and can be used in conjunction with the flue shield to reduce the rear clearance to the minimum allowable distance.

Please see fire specifications regarding safety clearances for your Bosca fire.

The single skin stainless steel flue shield is to be riveted to the flue pipe using stainless steel rivets in the flue shield brackets. The flue shield must be installed with a 10mm gap between the bottom of the flue shield and the top surface of the appliance.

BOSCA

DIAGRAM OF 45° CEILING PLATE

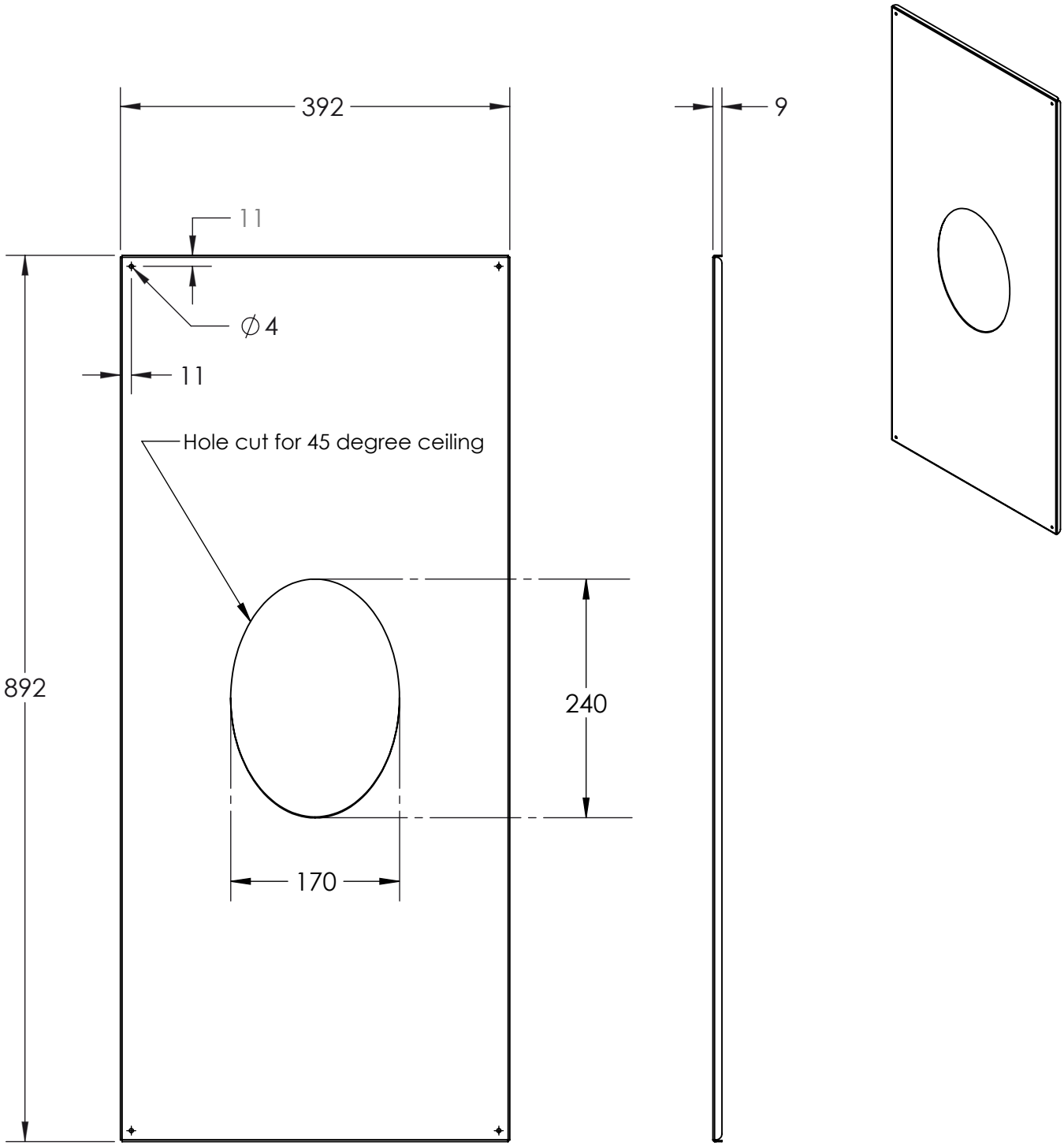

Ceiling Plate required as tested

BOSCA®

FLUE KIT BLACK 4.2M

Contents Include:

- 2 x Flue Stainless Steel 150 x 1200mm (Black)
- 1 x Flue Stainless Steel 150 x 1200mm
- 1 x Flue Stainless Steel 150 x 600mm
- 1 x Flue Galvanised Liner Combination (Inner: 200 x 1200mm / Outer: 250 x 1200mm)
- 1 x Flue Outer Galvanised Liner Slip Extension 253 x 1200mm
- 1 x Anti Down-Draught Cowl 150mm
- 1 x Apron Cover 150-250mm
- 1 x Ceiling Plate 150mm (Black) 370mm Square
- 1 x Ceiling Plate Screw Pack (4)
- 1 x Top Spacing Bracket, Bolt and Nut
- 2 x 40 x 40 x 1200mm Galvanised Mounting Rails
- 1 x Flue Shield

OPTIONAL COMPONENTS FOR A SLOPING CEILING (NOT SUPPLIED IN KIT)

1X polished SS ceiling plate at 45°, 30°, or 15°
1X pack (4) ceramic ceiling plate spacers
1X 150mm - 200mm spider bracket
1X 200mm - 250mm spider bracket

BOSCA

FLUE SHIELD INSTALLATION INSTRUCTIONS

BOSCA FLUE SHIELD

- The Bosca Flue Shield comes with brackets attached for attachment to the flue pipe.
- Attach to the flue pipe directly above the fire using 4 stainless steel 3.2mm rivets, as shown.
- The bottom of the shield should be 10mm from the top of the fire. Ensure that the angled bracket is at the top, as shown.

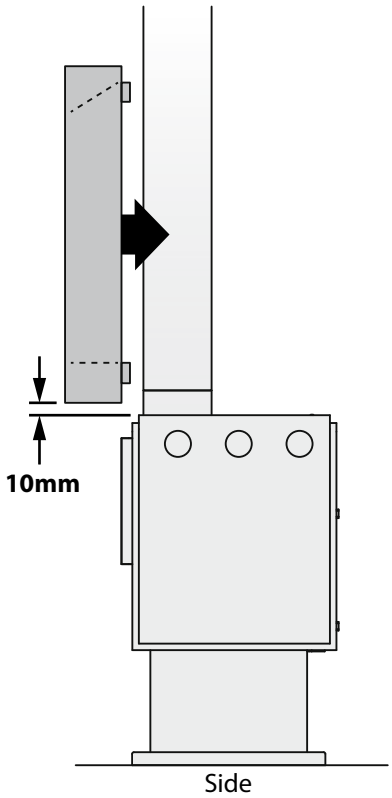

BOSCA REAR HEAT SHIELD (IF FITTED)

- Drill 2 holes in the flue shield at the bottom, matching the holes in the heat shield, and rivet the heat shield to the inside of the flue shield.
- The rear heat shield should rest on the top of the fire once the flue shield is fitted.

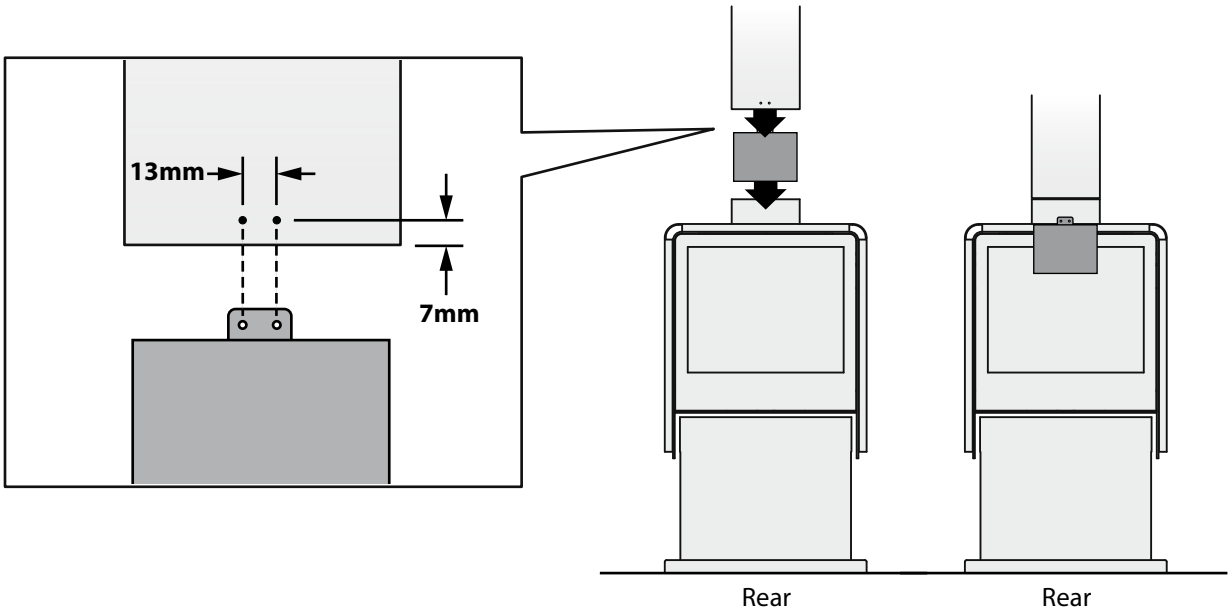

APPLIED RESEARCH SERVICES LIMITED

P.O. Box 687, Nelson,
New Zealand

Phone (03) 547 7347
Email: info@appliedresearch.co.nz
Web: www.appliedresearch.co.nz

Customer: **Retail Links**
PO Box 9056
Annesbrook
NELSON

P1930/6

IANZ ACCREDITED LABORATORY

This laboratory is accredited by International Accreditation New Zealand (IANZ). The tests reported herein have been performed in accordance with the terms of our accreditation. This accreditation does not extend to any opinions or any interpretations of test results contained in this report. Laboratory Registration Number 395.

IANZ is recognised at international level by ILAC. This means that an IANZ endorsed test report or certificate is also recognised by other signatories to the ILAC MRA such as NATA.

Compliance Certificate

Appliance	Jayline/Fisher MK II 150 mm Freestanding Wood Fire Flue Kit
Test Standard	AS/NZS 2918:2001 Appendix F.
Full Report	16/2854. The full report contains information on the test methods, details of the appliance tested, the installation and the results of the test in flat ceiling configuration. 16/2855. The full report contains information on the test methods, details of the appliance tested, the installation and the results of the test in sloping ceiling configuration.
Minimum Clearances	The Jayline/Fisher Mk II Flue Kit meets the requirements of AS/NZS 2918:2001 when the Jayline/Fisher Mk II Flue Kit is installed as detailed in the manufacturer's instructions. In flat and sloping ceiling installations the ceiling and roof penetrations may have timber framing in contact with the outer liner at any 4 points around the liner.

Full Report Ref.: 16/2854, 16/2855

This Report:
Report: 17/2895

Prepared by: G. Looman

Approved by: W.S. Webley

Release Date: 16-8-17

This report relates only to the product sample tested. Any modifications to the product may invalidate the compliance results. This report must not be reproduced except in full. Results are based on materials and information supplied by the client. Applied Research Services Ltd shall not be liable in respect of any loss or damage (including consequential loss or damage) resulting from use of reports prepared by them.